PWS™ BEV-300 Series

OWNER'S MANUAL

Includes installation and maintenance information for the PWS™ BEV-300 Series Pure Water Appliances.

Contents

Pure Water Systems, Inc.
5707 238th Place NE
Redmond, WA 98053
(425) 836-5665
http://www.purewatersystems.com

January 2007

CHAPTER 1

Getting Started

Thank you for purchasing this quality water purification system by Pure Water Systems. Every PWS™ BEV-300 Series system combines the most efficient water treatment methods available to achieve a very specific result—totally pure water meeting the rigorous Vincent (BEV) standards for bio-compatibility.

This manual provides information about the application and servicing of your PWS™ BEV-300 Series pure water appliance. Descriptions of the components and their functions will help to answer frequently asked questions. By thoroughly reading this manual you will be better able to operate your new system and perform simple maintenance.

SETTING UP YOUR BEV SYSTEM

Your PWS™ BEV-300 Series system requires no electricity—the only requirement is adequate water pressure. This unit is designed to operate within a pressure range of 45–100 psi (3.1–6.9 bar). The amount of purified water produced depends primarily on your water pressure, temperature, and the amount of Total Dissolved Solids (TDS).

The exceptional reverse osmosis membrane used in the BEV Series is capable of producing over 40 gallons (~150 liters) per day of pure BEV quality water. If you plan to install this unit on a private well system, you should check your water pressure gauge. If the low pressure setting is less than 45 psi (3.1 bar), ask a plumber to adjust and raise the pressure to the minimum level of 45 psi.

IMPORTANT NOTE:

For private well owners we recommend that you choose the PWS-BEV-340P system which includes a booster pump and is completely configured at the factory. This eliminates fluctuations in line pressure associated with private wells and ensures your BEV system operates at peak efficiency.

While 45psi is enough to produce water with the exceptional purity required to meet BEV standards, you may find water flow to the faucet is less than optimal, and that your holding tank will not store much water. (The amount of water stored is a function of line pressure.)

While it is possible for the standard BEV-340 system to be modified by the end-user without voiding the lifetime warranty, we prefer instead that you obtain the 340P system from the factory.

Installing Your BEV300 System Requires the Following Steps:

- Install the sink-mounted chrome faucet.
- Install the feed water saddle valve to deliver tap water to your system.
- Install the drain saddle valve so contaminants can be flushed down the drain.
- Mount the DI Module and Frame Assembly to the cabinet sidewall (optional).
- Make the tubing connections.

Unpack the System

Contents include:

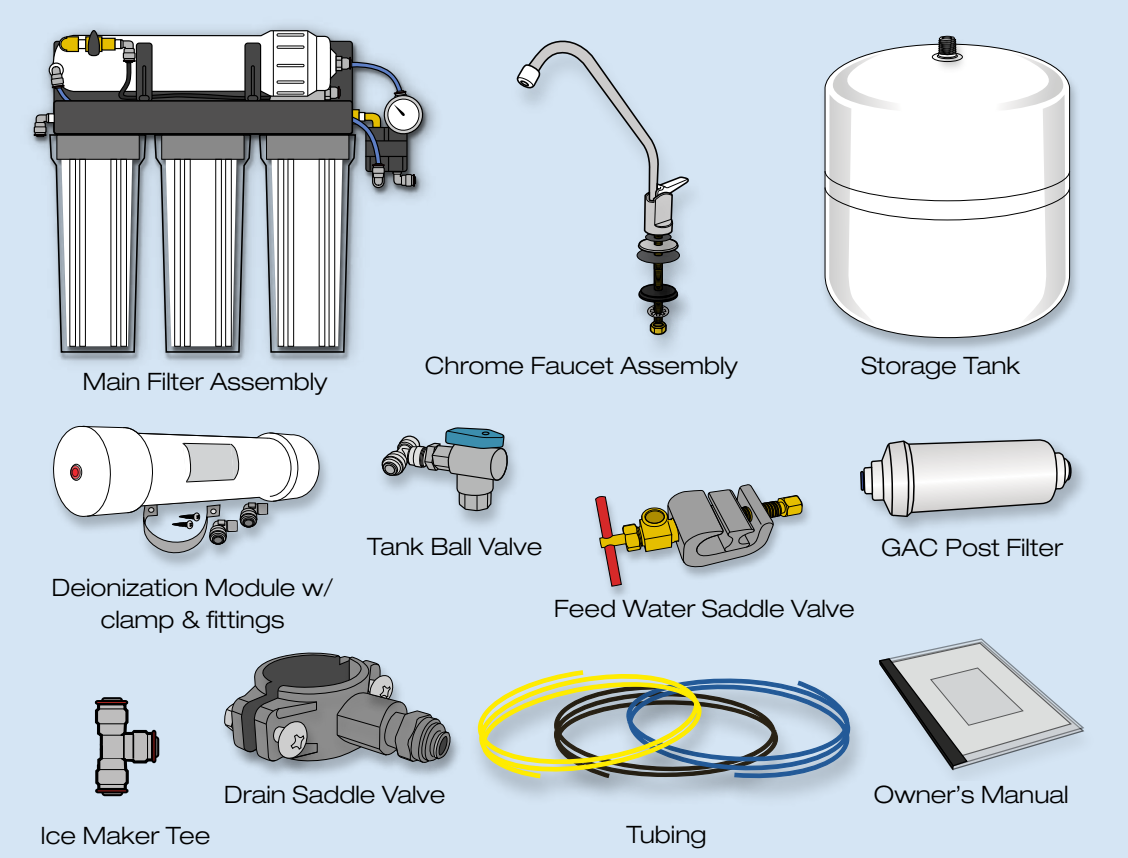

Required Tools

Hi Speed Drill	#2 Phillips Screw Driver
¼" High Speed Drill Bit	Teflon thread tape
½" High Speed Drill Bit	Razor knife with fresh sharp blade
1/16" High Speed Drill Bit	Adjustable (Crescent) Wrench
For porcelain sinks, a Dremmel® tool and ¾" silicon carbide grinding wheel or a Glass & Tile carbide spade-tipped bit.	For granite counter-tops, you will need to have a professional drill a ½" hole.

Planning the Installation

☞ Review the following instructions completely before proceeding. (Refer to diagram on page 31.)

BEV300 systems are comprised of several compact components which fit easily beneath most kitchen sinks. We encourage you to establish the desired location of each of the components before proceeding. Installing the main assembly against the left sidewall is recommended whenever possible. The storage tank has built-in feet for upright positioning and it can be placed on its side when space is limited. (A stand is included.)

Installing the Chrome Faucet Assembly

1) Select a location for the faucet on the sink top.

☞ **NOTE:** Make sure there are no reinforcing ribs under the sink drilling location.

2) Use factory approved method or approved plumbing practice to drill hole in sink.

   Porcelain sinks: factory approved method is: first grind away porcelain with a Dremmel® tool and silicon grinding wheel (about ¾" circle). Then, use a standard ½" high-speed drill bit to drill hole through metal portion of sink. *(See Figure 2, right)* Alternately, use a "glass and tile carbide spade tipped bit."

   Acrylic sinks: use ½" high-speed drill bit.

   Stainless Steel sinks: use ½" high-speed drill bit or ½" Greenlee chassis punch.

3) Install faucet according to detailed diagram in Appendix C–page 29, insuring rubber gaskets are place. Tighten lock nut beneath sink. Save compression fitting parts for connection to GAC post-filter.

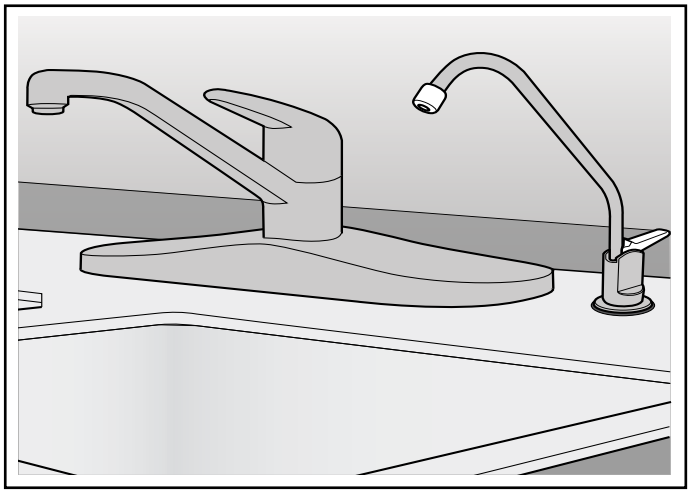

Figure 1, Pure Water Faucet (see detail in Appendix C)

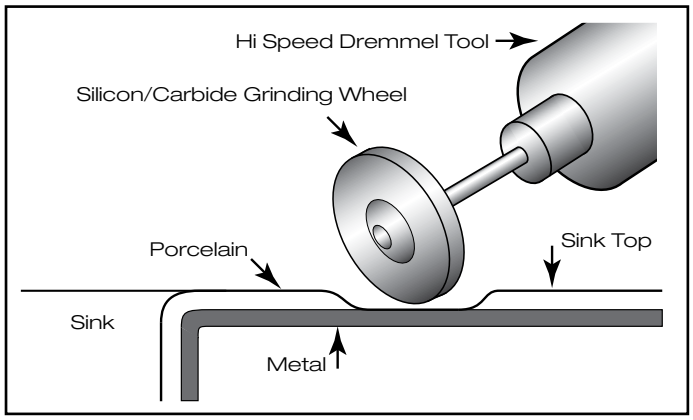

Figure 2, Using a Dremmel® Tool to Remove Porcelain

Installing the Feed Water Saddle Valve

The saddle-type valve supplied is intended for use on ⅜" to ½" copper tubing cold water supply line. It is not intended for flex lines.

☞ **Install on cold water line only!**

1) Turn off the cold water valve under the sink or the main valve for the house.

2) Slide clamp over the copper tubing and tighten screw firmly to hold the clamp in position.

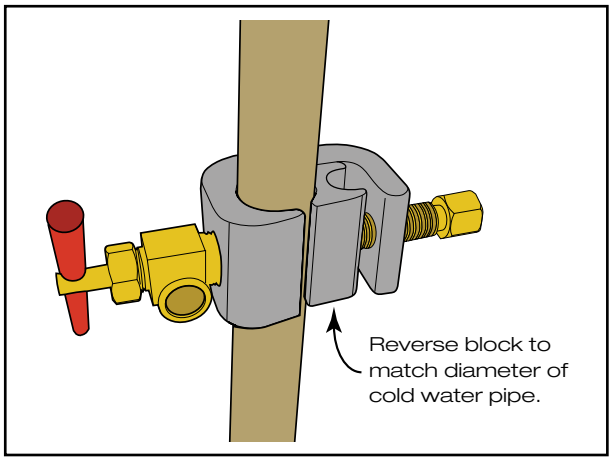

Figure 3, Feed Water Saddle Valve

3) Pierce the copper tubing by turning the needle valve handle clockwise until it is firmly seated.

4) The valve is closed in this position. Turn on the MAIN supply valve to pressurize cold water line. Immediately check for any signs of leaks.

5) Set aside compression fittings for later use connecting yellow feed tubing to system.

When ready to supply water to the system, turn valve handle counter-clockwise until fully open.

In some instances the self-piercing valve provided will not be compatible with your plumbing. We have provided a feed valve that will satisfy most scenarios. Alternate parts using standard ¼" compression fittings can be found at plumbing supply or home improvement stores. On rare occasions, it may be necessary to contact a plumbing contractor to complete your installation.

Installing the Drain Saddle Valve

The drain saddle assembly should be installed above the trap and on the vertical or horizontal tailpiece. *(See Figure 4)*

Refer to Figure 5 *(below right)* and follow steps 1 through 4.

Do not over-tighten the fitting! Doing so can crack the drain saddle. This is a low-pressure connection; it is not necessary to screw the fitting all the way into the saddle.

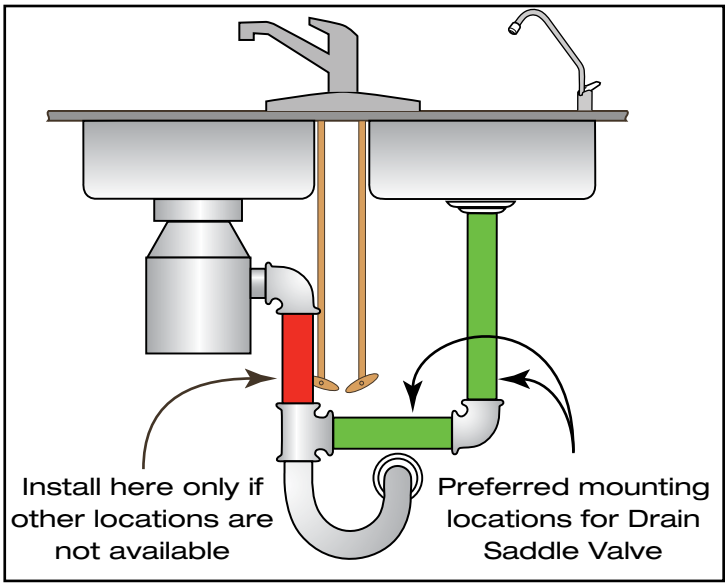

Figure 4, Drain Saddle mounting locations

☞ **NOTE:** When installing the Main Assembly, mount the frame above the position of the drain saddle whenever possible. (*See Figure 8 the next page.)*

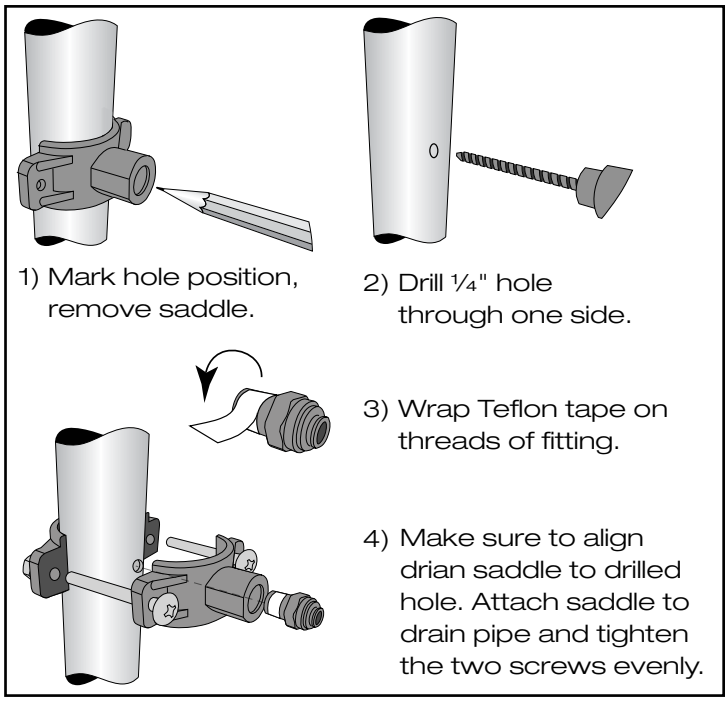

Figure 5, Mounting the Drain Saddle Valve

Preparing to Mount the Main Assembly

When possible we recommend mounting the main assembly on the left sidewall of the cabinet, but this is not a requirement. It is not required the system be mounted at all—many owners choose to let the main assembly stand unsupported on the floor of the cabinet.

Mounting the system will make it easier to perform periodic and annual maintenance. Allowing 15¼" from the cabinet floor to the keyholes will allow the pre-filter canisters to be removed without taking the main assembly off the wall.

Install the screws provided allowing for the thickness of the frame. (A pilot hole using a 1⁄16" drill bit is recommended for particle board side-walls.)

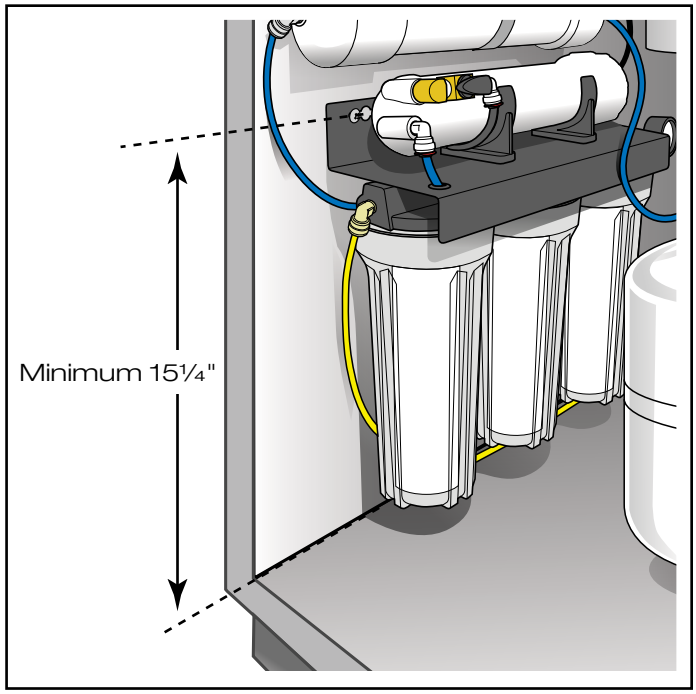

Figure 6, Minimum space needed to perform service without removing main assembly from sidewall.

☞ NOTE: Do not hang the assembly until tubing connections have been made (following pages.)

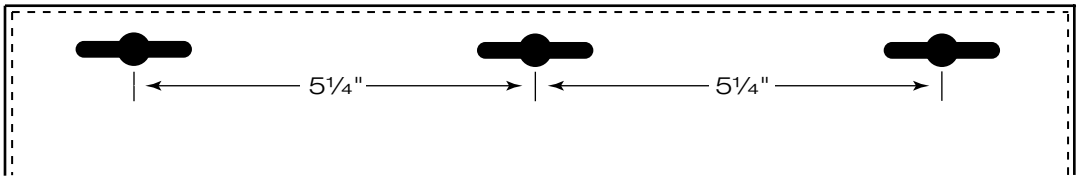

Figure 7, Spacing between keyholes (diagram not drawn to scale)

It is best to have the anodized aluminum frame placed above the plane of the drain saddle valve whenever possible. When this is not possible, extra care must be taken when routing tubing from the assembly to the drain saddle valve. *(See Figure 8, right.)*

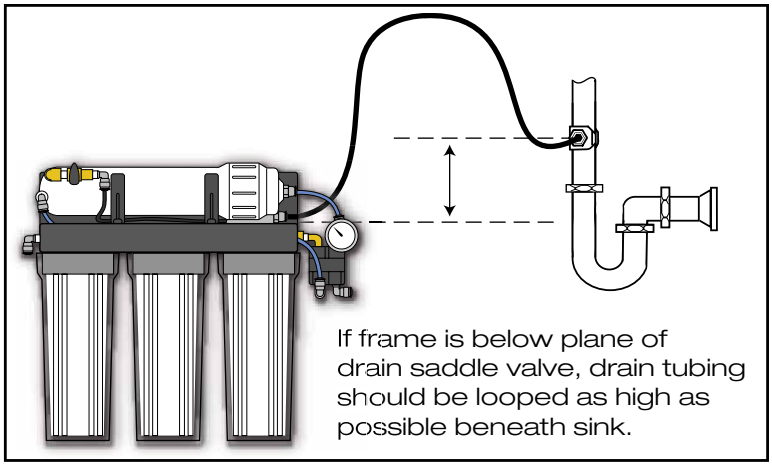

Figure 8, Drain Tubing Connection

☞ Before proceeding, make sure the three pre-filter canisters are firmly attached.

Mounting the Deionization Module

The deionization (DI) module can be placed anywhere convenient inside the cabinet. Keep the distance between the main assembly, storage tank, and DI module as short as possible. The DI module can be mounted horizontally (preferred) or vertically. If mounted vertically, the outlet should be at the bottom.

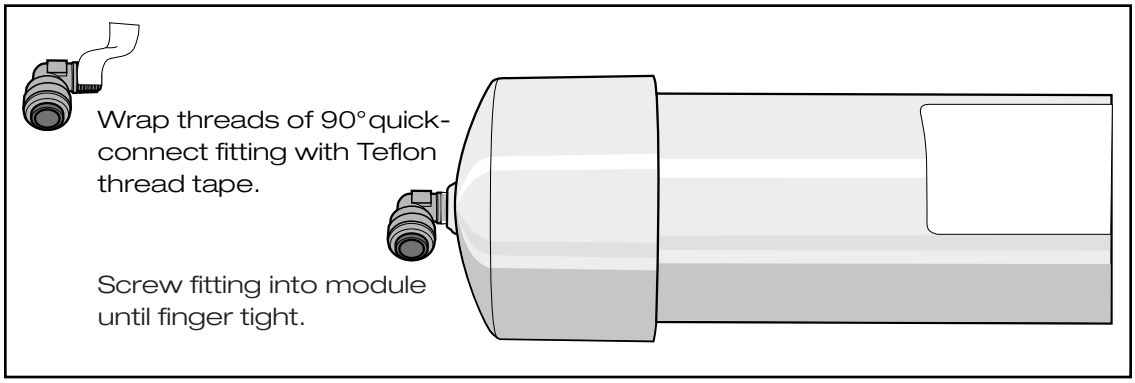

Figure 9, Installation of 90° Speedfit Fittings into Deionization Module

1) Establish the position for the deionization module.

   If mounting above the main assembly *(See Figure 6, previous page; and Appendix C, page 31)* be sure to allow adequate space to attach the main assembly. (Allow approx. 3" from the bottom screw of the DI mounting band to the screws supporting the main assembly.)

2) Secure the module to the wall of the cabinet using the supplied stainless steel clamp and screws.

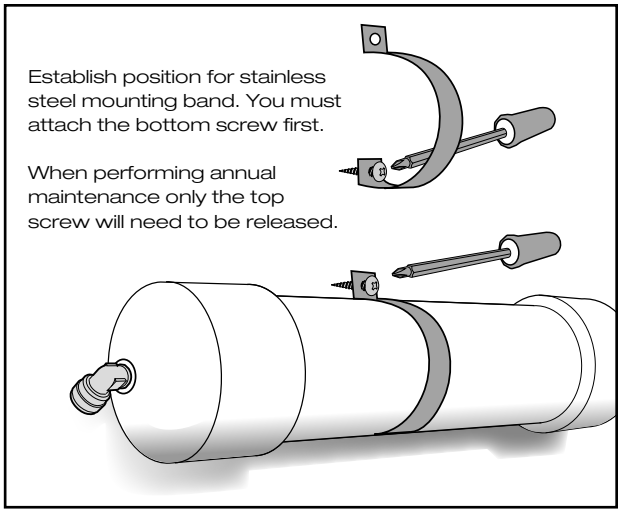

Figure 10, Mounting the Deionization Module

MAKING THE TUBING CONNECTIONS

You have completed the bulk of the installation tasks. All that remains is connecting tubing between the components. Three lengths of tubing have been supplied:

- Yellow tubing to connect the feed water saddle valve to the inlet on the main assembly.
- Black tubing to connect the drain saddle valve to the drain line check valve on the right rear of the main assembly frame.
- Blue tubing for all purified water connections: main assembly to DI module, DI module to tank, tank to GAC Post-filter, and Post-filter to faucet.

☞ **NOTE:** When cutting the poly tubing, DO NOT USE SCISSORS. Use a razor knife with a fresh blade. Do not crimp or collapse the tubing. Cut the tubing with a clean, 90° angle. This will allow the tubing to seat firmly into the fittings, creating a secure and leak free connection.

Connecting Tubing to John Guest *Speedfit®* Fittings

PWS™ BEV Series systems make extensive use of John Guest *Speedfit®* fittings. These high quality components provide secure, leak free seals and make it easy to connect and disconnect tubing without the use of tools.

☞ Refer to diagrams on page 30, Appendix C.

Connect Cold Water Supply to Feed Water Inlet

Measure and cut a length of **yellow** tubing to connect the feed water saddle valve to the inlet on the left side of the frame assembly. Connect the tubing to the saddle valve using the compression fittings provided. *(See Figure 11, right, and installation diagram on page 31.)*

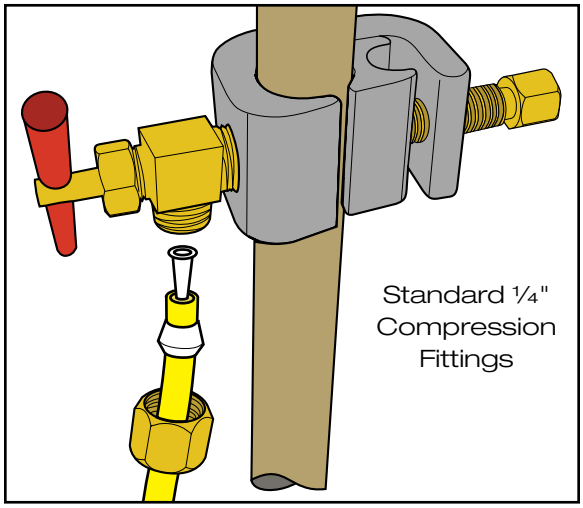

Figure 11, Connect tubing as diagrammed

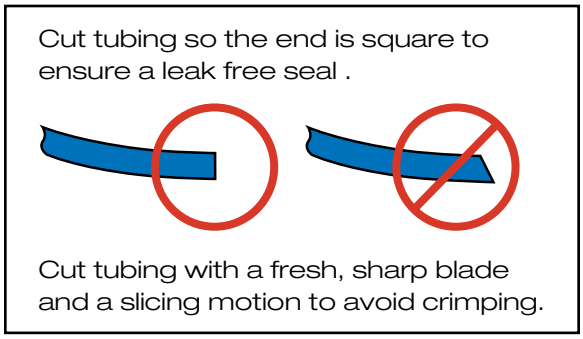

Figure 12, Cut tubing square. Do not use scissors.

Connect the Drain Line

Measure and cut a length of **black** tubing to connect the drain water check valve on the frame assembly to the drain water saddle valve. *(See Figure 13, right, and installation diagram on page 31.)*

☞ **IMPORTANT:** If the frame of the main assembly is not above the drain saddle valve, you will need to loop the tubing as high as possible beneath the sink. Be sure to allow for this loop when you measure. *(See Figure 8 on page 7.)* A self-adhesive tubing clip has been provided to secure the drain loop.

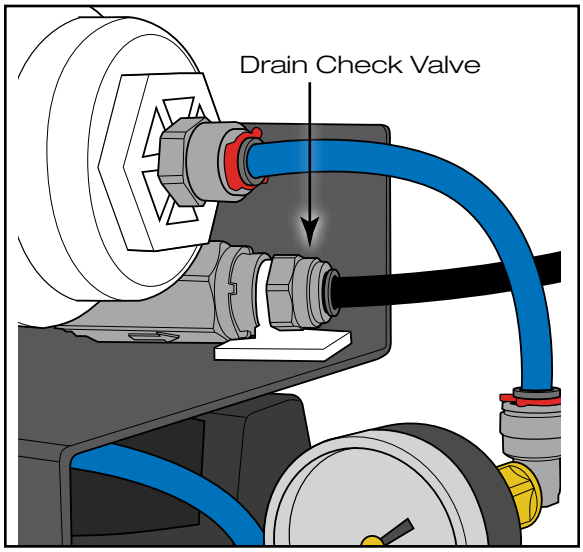

Figure 13, Drain Line Connection

Connect DI Module to Main Assembly

Measure and cut a length of **blue** tubing to connect the reverse osmosis (RO) water outlet on the main assembly to the INLET of deionization module. Typically, this tubing is routed behind the main assembly. Insert tubing into fittings and secure with red lock clips provided. *(See Figures 14 & 15, and installation diagram on page 31.)*

☞ **NOTE:** There is an arrow indicating direction of flow on the DI module label.

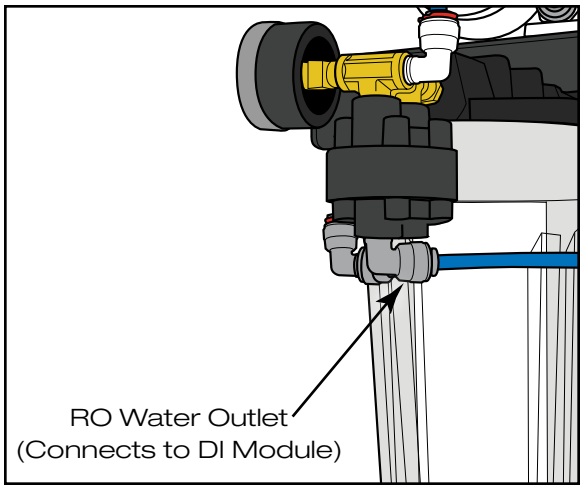

Figure 14

Mount the Main Assembly to Cabinet Sidewall

With the cold water supply, drain line, and DI module connected, the main assembly can now be placed onto the screws previously installed. Place the keyhole openings over the screws then slide the frame horizontally onto the mounting screws.

You may wish to remove the main assembly and adjust the screws to make the connection as secure as possible.

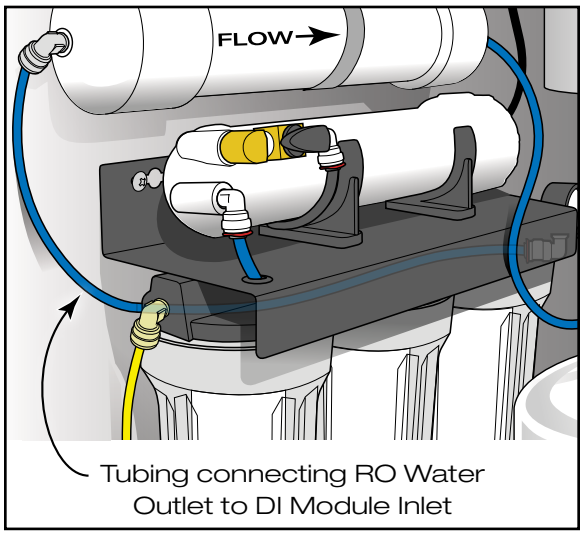

Figure 15

Prepare Storage Tank

Wrap Teflon pipe tape on the threads of the storage tank, then place three (3) drops of regular household chlorine bleach into the opening.

Close the tank ball valve by turning the blue handle perpendicular to the valve body, then screw the valve onto the storage tank until firm. DO NOT OVER-TIGHTEN. *(See Figure 16, right.)*

Determine the position for the storage tank beneath the sink. If space is at a premium, it is OK to lay the tank on its side. A stand is included.

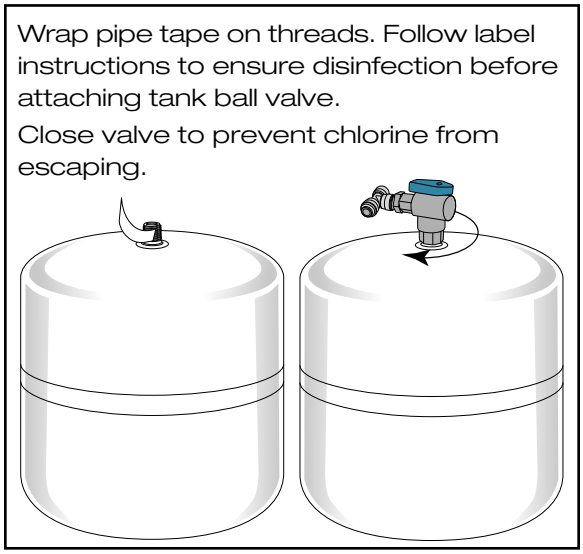

Figure 16, Storage Tank Preparation

Connect DI Module to Storage Tank

With the tank in position, measure and cut a length of **blue** tubing to connect the OUTLET of the DI module and the "T" connector on the tank ball valve. *(See Figure 17, right)*

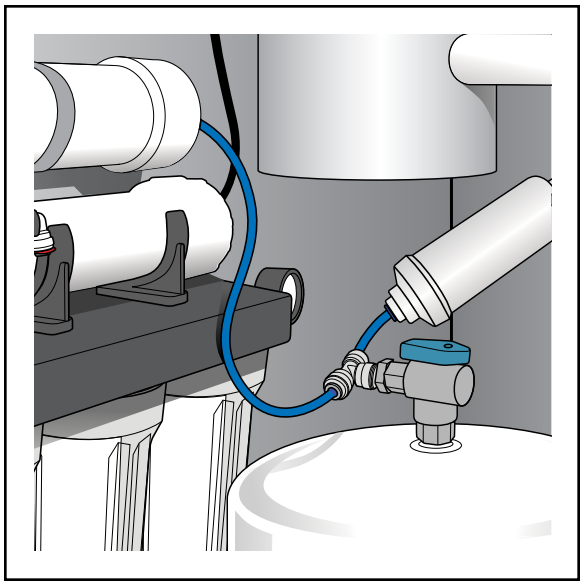

Figure 17, DI Module to Storage Tank Connection

Connect GAC Post Filter between Storage Tank and Faucet

Refer again to the diagram on page 31 in Appendix C. The GAC post-filter is typically installed just below the faucet assembly and is easily supported by the tubing and *Speedfit®* fittings.

Measure and cut a length of **blue** tubing to connect the outlet of the GAC post-filter to the faucet assembly. Placing the post-filter near the tank will make it easy to service when needed.

Connect one end of the **blue** tubing to the threaded stem of the chrome faucet assembly using the ¼" compression fittings provided. *(See Figure 12 on page 10.)*

Connect the opposite end of the **blue** tubing to the outlet of the GAC post-filter.

Finally, measure a length of **blue** tubing to connect the storage tank to the GAC post-filter.

☞ Leave the handle on the tank ball valve closed at this time.

Congratulations! You have completed the installation of your PWS™ BEV-300 Series water purification system. You are now ready to begin making pure, BEV quality drinking water.

Starting Your System

1) Open the chrome faucet on the sink top.
2) Verify the Tank Ball Valve is closed.
3) Put Flush Valve into the "Open - Flush" position. *(See Figure 17, below.)*
4) Slowly open your cold water supply valve. Water will begin to fill the three pre-filter canisters. You will also begin to hear water flowing past the flush valve and into the drain.
5) The system might "chug" and appear to start and stop. If this occurs close the Flush Valve half way to create back-pressure on the line.
6) Let the system "Flush" for about 10 minutes, then close the Flush Valve.
7) Check the pressure gauge. Record your initial pressure in Appendix B.

8) In approximately 20 minutes you will begin to see water drip from the faucet.

9) Close the chrome faucet on the sink top, and then quickly open the Tank Ball Valve to allow the storage tank to fill. Actual production rate will vary slightly depending on pressure, but your system will normally produce water at a rate of ~1.5 to 1.75 gallons per hour. The first tank of water may take longer.

10) **DISCARD THE FIRST FULL TANK OF WATER**. Open the faucet and let the water flow until only a trickle remains. Close the faucet and allow the tank to fill a second time. You are now ready to enjoy the great taste of 100% pure, BEV drinking water. (The RO membrane contains a preservative solution that will be flushed after the first tank of water is produced.)

Flushing

Flushing is the single most important maintenance function needed to keep your system operating at peak efficiency. This simple operation only takes a few minutes and extends the service life of the reverse osmosis membrane.

a) Flushing is only possible when the system is filling. (The gauge will read zero when the system is idle.) Drain off some water at the pure water faucet until you hear water begin to flow and there is pressure on the gauge.

b) Move the flush valve to the "Open—Flush" position. This will allow water to flow rapidly across the RO membrane, washing away concentrated contaminants.

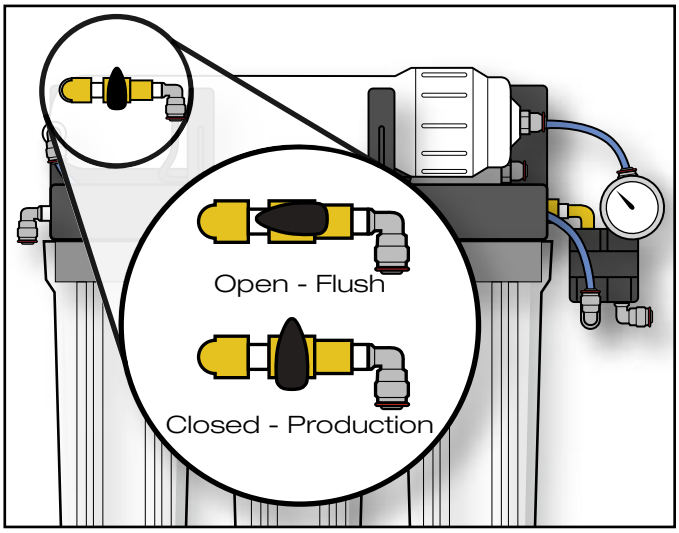

Figure 17, Manual Flush Valve

c) Set a kitchen timer so you do not forget to return the flush valve to the closed position.

Flushing once per week for 5 minutes is ideal. If you forget to flush the system for an extended period of time perform an exhaustive flush by leaving the flush valve open for 20 minutes.

If your unit has not been used for more than one week (e.g. while you are on vacation), drain the storage tank (use the water for watering plants, etc.) then flush the membrane for 5-10 minutes as described above.

IMPORTANT: Monitor your system and check for leaks frequently over the first week.

Most leaks are attributed to tubing not fully seated inside the Speedfit® fittings. Remove the red lock clip, compress the collet, and remove the tubing. Re-insert the tubing until you feel it bottom out on the tubing end-stop. Replace the red lock clip. This process solves 99% of leaking connections. If the leak persists, trim ¼" – ½" off the end of the tubing and try again.

CHAPTER 2

Getting to Know Your BEV System

Your PWS™ BEV-300 Series system combines the three most effective water purification technologies available. Alone, each of these methods is highly effective at a particular group of pollutants—but only when combined can you be assured of complete removal of ***all*** contaminants. Every system combines carbon adsorption, reverse osmosis, and deionization. By carefully matching the components utilizing these methods, Pure Water Systems is able to assure your system produces water which meets or exceeds the rigorous Vincent standards for bio-compatibility.

A LOOK AT THE KEY COMPONENTS

Sediment Filter

Water entering the system is first passes through our spun-polyester dual gradient sediment pre-filter. Any suspended particles such as sand, rust, or other deposits commonly found in tap water supply are removed. This protects the RO membrane from particles which might clog the pores. This pre-filter has been carefully manufactured for extremely high dirt holding capacity and removal of oil emulsions.

Granular Activated Carbon

Before water reaches the reverse osmosis membrane, it is subjected to twin, unidirectional granular activated carbon pre-filters. Flow is lengthwise, not radial, for maximum contact time and organic adsorption. Pure Water Systems has chosen to use twin carbon filters in this stage where every other manufacturer uses only a single cartridge. By using twin cartridges we insure complete removal of organic contaminates including pesticides, herbicides, and other hydrocarbon based compounds.

A single gram of steam washed, bituminous grade, granular activated carbon typically has ~1500 square meters of surface area—meaning our twin GAC pre-filters provide over 400 acres (1.62 square kilometers) of surface area where organic contaminants dissolved in the water have an opportunity to be adsorbed and eliminated. This immense GAC surface area also insures complete and total conversion of chlorine—protecting the polyamide thin-film-composite (TFC) reverse osmosis membrane downstream.

Reverse Osmosis Membrane

A custom designed and extremely efficient spiral wound reverse osmosis membrane produces up to 40 gallons (~150 liters) of purified water per day. This membrane utilizes the unique properties of a semi-permeable material which allows passage of pure water molecules while not allowing dissolved salts, heavy metals, and organics to pass through. Our extraordinary membrane is designed to consistently and significantly reduce the total dissolved solids in the source water supply by greater than 97%. It also has a tremendous capacity to completely reject organic and biological contaminates, including water-borne microorganisms.

The reverse osmosis membrane used in this system can tolerate significantly higher concentrations of oxidizing contaminants like iron and manganese than RO membranes found in other systems, as well as a much higher degree of hardness. However, there are limitations—the operating parameters for this membrane are found in the Specifications section of this manual.

Deionization Module

This proprietary module contains a unique blend of deionization resins carefully matched to our reverse osmosis membrane and provides superior rejection of monovalent ions, fluoride, and nitrates; contaminants only partially removed by reverse osmosis. Including deionization after reverse osmosis sets BEV systems apart from other purifiers.

Following the DI resins, there is even more granular activated carbon to polish the product water for a clean, fresh taste. The flow rate at this stage provides tremendous contact time to assure complete removal of any remaining organic contaminates.

The final stages of our proprietary DI module are included to prevent the reverse migration of contaminates into the system. These stages further separate BEV systems from other brands. After carefully combining the previous components it is essential to integrate these stages to ensure 99.999% removal of bacteria, cyst, and virus (EPA EST. No. 52531-FL-01). These stages also prevent any contaminants from entering the system via the faucet.

OPERATING PARAMETERS

To insure proper operation of your BEV system, it is advisable to collect the following information about your water supply. This information is generally available from your municipal water department, and in many cases is available from the website of your local Department of Public Works.

Pressure

In order to overcome the natural osmotic force, adequate water pressure must be available from your water supply. The osmotic force is directly proportional to the concentration of dissolved solids in the water. When the water pressure is equal to the osmotic force, there will be no movement of pure water molecules across the semi-permeable reverse osmosis membrane. A minimum of 45 PSI is required. (If your water pressure is below 45 PSI, a booster pump is available. If you are on a private well, have your plumber raise the minimum pressure above 45 PSI.)

In general, the higher the pressure (up to 100 PSI), the better the performance of the membrane at rejecting contaminants.

pH

The TFC membrane will hold up very well when the pH of the feed water is between 3 and 11. Water supplies with pH over 11 are very rarely, if ever, found. (Chlorine bleach has a pH of ~11.5.)

Chlorine

Chlorine is the most common substance added to municipal water supplies. Its purpose is to eliminate biological growth (i.e. chlorine is toxic). Regulations usually require there be residual chlorine when

water reaches your tap. Typically, the residual concentrations of chlorine in household water range from 0.5 to 1.0 parts-per-million (ppm).

Besides being toxic, chlorine will degrade the TFC reverse osmosis membrane. Therefore, it is essential to remove chlorine from your tap water before it reaches the RO membrane. Your BEV system includes a pre-filter containing a carefully chosen grade of granular activated carbon (GAC) which will very effectively remove chlorine from your tap water. It is important to replace the pre-filter annually to insure no chlorine is reaching the membrane.

Sediment

In areas with very high sediment concentrations the pre-filter may clog prematurely. If the pre-filter becomes clogged, you will likely notice a decrease in the production rate from your system. In areas with very high sediment concentrations, it may be necessary to replace the pre-filter on a semi-annual basis.

Over the course of one year, the sediment filter will typically become significantly discolored. This is not cause for alarm. If you notice pressure at the gauge has dropped significantly below your initial observations, consider changing this filter to restore adequate pressure and improve overall system performance.

Iron

Iron concentrations greater than 1 mg/l can degrade overall system performance. Manganese is often found with high iron concentrations. If your water supply has iron (or combined iron/manganese) concentrations above 3 mg/l, pretreatment is required. (Most RO systems can only tolerate .1 mg/l of iron before needing pre-treatment.)

CHAPTER 3

Maintenance and Servicing

Minimal work is required to keep your BEV system in peak operating condition. Simply follow a regular schedule of flushing and replace the filter modules as recommended. These simple steps will insure your unit consistently produces ultra-pure water meeting BEV standards.

Take care of your BEV system and it will provide many years of healthful drinking and cooking water for your entire family.

FLUSHING

☞ Flushing is the single most important maintenance function needed to keep your system operating at peak efficiency. This simple operation only takes a few minutes and extends the service life of the reverse osmosis membrane.

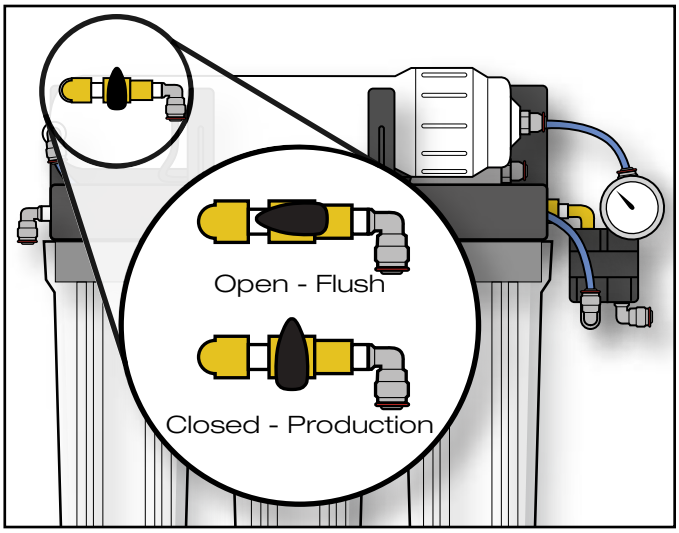

1) Flushing is only possible when the system is filling. (The gauge will read zero when the system is idle.) Drain off some water at the pure water faucet until you hear water begin to flow and there is pressure on the gauge.
2) Move the handle on the flush valve to the "Open - Flush" position. This will allow water to flow rapidly across the RO membrane, washing away concentrated contaminants.
3) Set a kitchen timer so you do not forget to return the flush valve to the closed position.

☞ **Flushing once per week for 5 minutes is ideal.** If you forget to flush the system for an extended period of time perform an exhaustive flush by leaving the flush valve open for 20 minutes.

If your unit has not been used for more than one week (e.g. while you are on vacation), drain the storage tank (use the water for watering plants, etc.) then flush the membrane for 5-10 minutes as described above.

FILTER REPLACEMENT

After 12 months of use, it is time to replace the sediment pre-filter, the twin GAC carbon filters, and the Deionization Module to insure your system continues to produce water within BEV parameters. Replacement modules can be ordered directly from Pure Water Systems via our web site at http://www.purewatersystems.com.

1) Remove the contents from beneath the kitchen sink where the filter assembly is located.
2) Turn off the cold water supply line.
3) Drain ALL the water from the storage tank by opening the sink mounted faucet.
4) Close the faucet and the ball valve on the top of the storage tank.
5) Open the Flush Valve (relieves pressure)
6) Place a towel beneath the pre-filter/RO assembly—it will absorb the small amount of water that will spill from the modules as they are changed out.

It is often helpful to have an empty 3-5 gallon bucket nearby.

Replacing the Sediment Pre-filter

The sediment pre-filter is in the canister on the left side of the assembly, beneath the manual flush valve. The sediment pre-filter will likely be distasteful looking—it is common for sludge to form on the filter surface. After one year, this sludge layer can be fairly thick.

a) Push the red button (on the top of the aluminum frame, above the pre-filter canister) to reduce any back pressure remaining in the canister.
b) Firmly grasp the canister with both hands and unscrew it from the pre-filter assembly. (A canister wrench is available.) Carefully move the canister over the bucket, dump the water, and remove the old pre-filter.
c) Using a long handled, soft bristle brush, scrub the inside of the canister with a mild dish washing detergent and rinse.
d) Place the new pre-filter into the canister, and then carefully re-attach the canister to the assembly. Tighten until firm.

Replacing the GAC Pre-filters

The twin unidirectional, GAC pre-filters are in the middle canister and the canister on the right. Follow the same procedure as described for replacing the sediment pre-filter (above).

Replacing the DI Module

(Refer to page 30, Appendix C, for details on releasing tubing from Speedfit® fittings)

1) Disconnect the tubing from both ends of the DI module. Some water will pour from the tubing once released. (If the DI module was mounted vertically, you might find less water will be spilled if you remove the tubing from the outlet end ***after*** removing the module from the retaining clamp.)
2) Remove the top screw from the clamp and remove the old DI module. (The clamp is flexible and can be bent out to allow the module to be removed.) ***Note the direction of flow. You will need to install the new DI module in the same orientation.***
3) Unscrew the *Speedfit®* fittings from both ends of the module. Scrape away the old Teflon® thread tape (without damaging the plastic threads) and re-wrap the threads.
4) Install the *Speedfit®* fittings into the new DI module.
5) Place the new DI module into position, taking care to note the direction of flow. Secure the clamp and re-connect only the tubing from the main assembly. Gently tug on the tubing to insure a secure, leak free connection.

☞ The next step will disinfect and sterilize the storage tank:

6) Carefully place a few drops of regular household bleach into the tubing that connects the outlet of the DI module with the storage tank before connecting the tubing to the DI module. (As the tank fills with water for the first time, it will be subjected to a strong but continually diluting solution of chlorine.)

Alternate disinfection procedure:

a) Disconnect the tubing from the “T” connector on the tank ball valve and remove the storage tank from beneath the sink.

b) Wrap a towel around the ball valve and slowly unscrew the valve from the storage tank. There is always some water remaining in the tank and this will escape when the valve is removed. After setting the valve aside, place the towel over the tank opening and shake and rotate the tank to remove any remaining water.

c) Re-wrap the threads with Teflon® pipe tape.

d) Now place a few drops of liquid chlorine bleach into the top of the tank and re-install the tank ball valve (with the valve in the closed position).

e) Reconnect the tubing to the swivel “T” connector.

Returning the System to Service

To return your system to service:

1. Verify the manual flush valve is in the “Open - Flush” position.
2. Open the valve on top of the storage tank.
3. Slowly re-open the cold water supply line. The pre-filter canisters should begin to fill.
4. After ten (10) minutes, move the manual flush valve to the “Closed - Production” position.
5. Check for leaks around the tops of the pre-filter canisters. If water is seeping from any of the canisters turn the cold water supply off, move the manual flush valve to the “Flush” position, and then relieve line pressure by pressing the red button on top of the canister. Unscrew the leaking canister from the assembly. Check to be sure the O-ring is properly seated and then carefully re-attach the canister to the assembly, taking care to align the filter module inside. Tighten until firm.
6. Check for leaks at either end of the DI module and at the storage tank.
7. Allow the system to produce a full tank of water.
8. Drain off and discard the initial tank of water. Do not use for cooking or drinking.
9. You are now ready to enjoy great tasting, pure BEV water for another 12 months!

CHAPTER 4

Frequently Asked Questions

Q: How long will my sediment pre-filter last before it needs to be replaced?

A: Under typical conditions, the pre-filter is designed to function properly for 12 months, and should be replaced annually. Sediment concentrations vary greatly between municipal systems so there is no way of determining the lifetime of a filter without knowing more about the tap water. In some cases, it may be necessary to replace the pre-filter more frequently.

Q: How long will my GAC pre-filters last before they need to be replaced?

A: Your PWS™ BEV-300 system has been designed to operate within a wide range of tap water conditions. These conditions vary greatly across municipalities, so it is difficult to state precisely how long your pre-filters will last. We have designed the system so that under the most extreme conditions your pre-filters will still be performing correctly after 12 months of use. Following an annual replacement schedule will insure your system is consistently performing as designed producing ultra-pure water which meets the rigorous BEV standards for bio-compatibility.

Q: How long will my reverse osmosis membrane last?

A: The membrane's life depends on the water conditions as listed in the specification section of this manual. If all these conditions are met, the life of the membrane is generally 2–4 years. If a membrane fails or its performance becomes reduced before this time, the cause can usually be traced to tap water conditions outside the specifications.

Q: How do I know if there is a problem with the membrane?

A: The best method is to measure the resistivity (conductivity) of the RO water and compare it to the tap water. You can invest in a resistivity meter (available from Pure Water Systems) or you can send samples to us for analysis. (Poor rejection rates may also be an indication of a clogged pre-filter, so check that filter first.) A large increase in the production rate is also an indication of membrane failure, and can often be traced to the membrane having been subjected to either freezing or hot water.

Q: How can I monitor the performance of the unit?

A: With identical tap water pressure, the production rate should remain fairly constant. If your system begins to produce water at a much faster rate, the RO membrane may have failed. If your system is producing water at a much lower rate, replacing the pre-filter is often indicated.

To monitor overall system performance, the best method is to obtain a resistivity meter (TDS meter) from Pure Water Systems.

Q: Will I lose valuable minerals when I drink purified BEV water?

A: No, the body does not readily assimilate the minerals found in drinking water. We obtain the majority of our minerals from the foods we eat. There are many more bio-available minerals in a piece of organic fruit or a serving of organic vegetables than in several gallons of water.

Q: Will pure BEV water leach minerals from my body?

A: This question reflects one of the common myths that are found in the water industry. It has no basis in fact or physiologic science. Pure water does perform a valuable function by helping the body eliminate wastes and unused minerals that have been excreted from cellular tissues, but it does not "leach" minerals out of the cells. This false claim was probably first made by companies wanting to boost sales of filters incapable of removing dissolved minerals and dangerous heavy metals.

Q: Will hot water ruin my RO membrane?

A: YES! Hot water over 100° F will damage the membrane and void your warranty. Make sure you use only COLD water in your BEV system.

Q: How should I store my purified water?

A: We recommend using a glass container. Used one gallon fruit juice bottles are an excellent choice. High quality polycarbonate containers are also acceptable for short term storage. If you store or transport your BEV water in polycarbonate containers, be sure to keep the containers out of direct sunlight to reduce ultra-violet degradation. Also, use only mild soap and luke-warm water to wash polycarbonate storage bottles.

Q: How should I store my unit when not in use?

A: If your unit is out of service for several days (while you are vacationing, for example) no special precautions are required. However, we do recommend you flush the unit for 10-15 minutes and discard the first tank of water when you return the system to production.

Q: How long does it take to make a tank of water?

A: The rate your system produces water is dependent upon several factors including source water pressure, temperature, and the amount of total dissolved solids (TDS). We rate our membranes very conservatively, and the PWS™ BEV 300 Series systems come with a 40 gallon per day membrane, meaning water production will normally be 1.5 – 2 gallons per hour.

Q: When I put my system into flush mode, it makes noise. Is this normal?

A: When your system is flushing, water is flowing to the drain much faster than normal production mode. The check valve will sometimes chatter with the increased flow, and this can be heard as a hum or rattle. When your system is first put in service, there may be air in the lines that can also cause noise from the system. After a few days the noise typically will go away.

You might also notice that your system will seem to start and stop (chug) when you open the flush valve. If this happens, simply open the valve a little less than fully open so some pressure is still showing on the gauge.

CHAPTER 5

Limited Warranty

Pure Water Systems, Inc. warrants to the original owner each PWS™ BEV-300 Series pure water appliance to be free from defects in materials and workmanship for as long as you own the product.

What the Warranty Covers

Full Lifetime Warranty on all parts (excluding normal module changes or abuse).

Your PWS™ BEV-300 Series pure water appliance is a sophisticated water purification system. Failure to follow the maintenance schedule or use other-than genuine Pure Water Systems components will void the exclusive lifetime warranty.

Exceptions to Lifetime Warranty

The Lifetime Warranty does not include damage caused by or resulting from unreasonable use, including failure to provide reasonable maintenance, or incidental or consequential damages, such as water damage or damage to appliances, fixtures or other equipment.

Warranty will be void if product failure or damage is due to any of the following:

1) Misuse, misapplication (e.g. unacceptable water conditions), neglect (e.g. inadequate filter changes), alteration, hot feed water, freezing, or accident.
2) Improper installation, operation, or servicing.

No one is authorized to change or add to this warranty.

What We Will Do To Correct an Inconvenience

Upon notice, we will repair or replace covered defective parts, free of charge.

If it is necessary to ship the product to Pure Water Systems or bring it to a dealer for service, the buyer must pay for any shipping or travel costs.

Pure Water Systems will pay for return shipping charges in the U.S. for parts or products covered under the warranty.

Pure Water Systems will furnish any factory labor to make repairs on parts or products returned to the factory that are covered under the warranty.

How State Law Relates To the Warranty

Some states do not allow the exclusion or limitation of incidental or consequential damages, so the above limitation or exclusion may not apply to you. This warranty applies to the original purchaser and gives you specific legal rights. You may also have other rights which vary from state to state.

How You Can Get Service

Contact Pure Water Systems customer service department for instructions and to obtain a returned materials authorization number (RMA#) before returning the defective part or product.

Pure Water Systems, Inc.
Customer Service Dept.
5707 238th Place N.E.
Redmond, WA 98053
Phone: (425) 836-5665

APPENDIX A

Specifications

Following are the recommended operating parameters for our custom rolled reverse osmosis membrane:

Membrane type	Spiral Wound Polyamide Thin Film Composite (TFC)
Production	Up to 40 Gallons-Per-Day (GPD)
Maximum Operating Temperature	40–100° F (4–38° C)
Operating Pressure	45–100 psi (3.1–6.9 bar)
pH Range	3.0–11.0
TDS Level, Maximum	2000 ppm
Turbidity	< 1.0 Net Turbidity (NTU)
Chlorine (Cl_2)	0.00 mg/l *
Hardness (as $CaCO_3$)	< 350 mg/l (20 Grains)
Iron (Fe) & Manganese (Mn) combined	< 3.0 mg/l
Hydrogen Sulfide (H_2S)	0.00 mg/l

* Every system is equipped with our unique twin unidirectional granular activated carbon pre-filters to remove organic contaminants and chlorine.

You can obtain specifics about your water supply from either your local water department or a water testing service like National Testing Labs (www.ntllabs.com). If the parameters of your water do not fall within the specified ranges as noted above, please contact Pure Water Systems or your local dealer for further treatment options.

Production is rated at optimum temperature of 70° F, 60 PSI, and 500 ppm TDS. Actual production will vary depending on local temperature, pressure, and TDS level.

Low tap water pressure will reduce the volume and quality of the water produced by your system. In low pressure situations (<45 PSI, 3.1 bar) BEV values cannot be assured. The addition of a booster pump (PWS-BP-300) is required.

ALWAYS USE COLD WATER—hot water will damage the TFC membrane.

The unit must not be allowed to freeze. Freezing water will expand inside the modules—damaging the membrane and potentially rupturing the filter housings. Damage of this type will void the warranty.

APPENDIX B

Replacement Schedule

How to Order

All parts and accessories are available on our web site at www.purewatersystems.com

Replacement Components

Module	Replacement Schedule	Part No.
Sediment Pre-filter	Annually (or as needed)	PWS-BEV300-SED
Unidirectional GAC Pre-filter	Annually	PWS-BEV300-GAC
Deionization Module	Annually	PWS-BEV-DI
BEV 300 Series RO Membrane	2-3 years (as needed)	PWS-BEV-RO40
GAC Post Filter	2-3 years (as needed)	PWS-TCR6

An annual filter change kit, which includes a sediment pre-filter, two GAC pre-filters, and a deionization module is available at a modest savings under part number PWS-AFRS-300.

Purchase Date: _____

Purchased From: _____

Serial Number: _____

Pressure Gauge Initial Reading: _____

Maintenance Log

Module	Date Replaced

Module	Date Replaced

CONNECTIONS

Sink Mounted Faucet Assembly

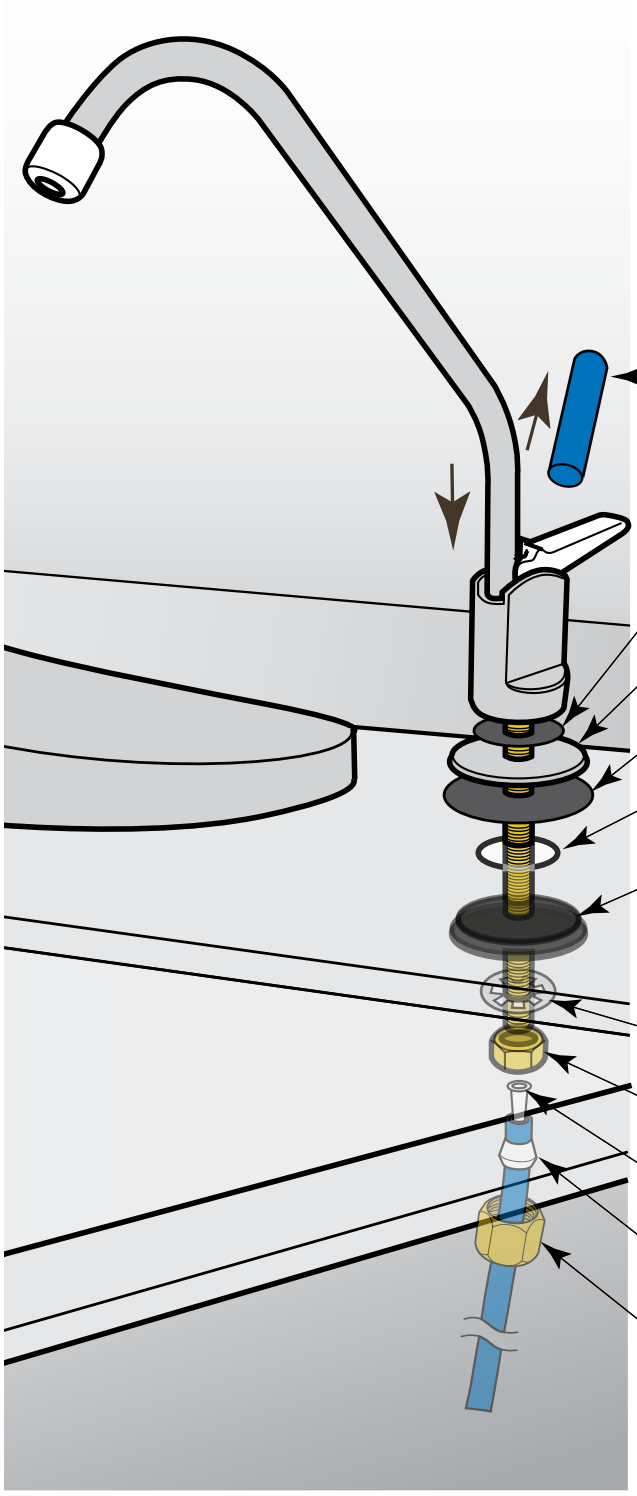

Anatomy of a John Guest *Speedfit*® Fitting

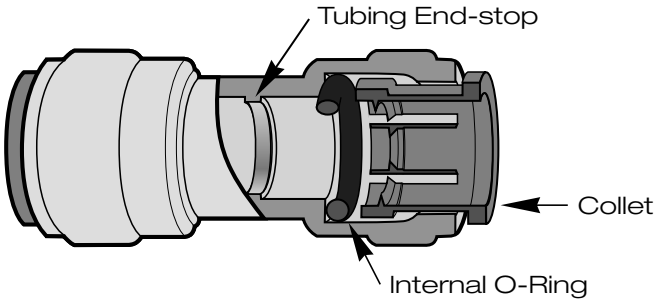

To Make a Connection:

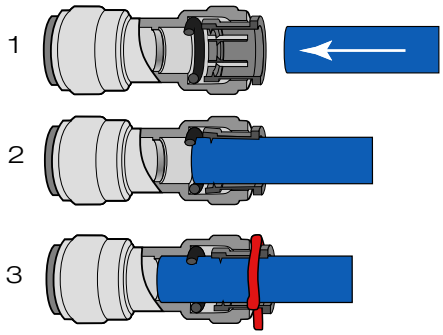

1) Insert tubing into fitting,
2) past the internal O-Ring,
3) until it bottoms out against the tubing end-stop.

Pull on tubing to ensure a secure connection, then slide red Lock-Clip between collet and fitting.

To Remove Tubing:

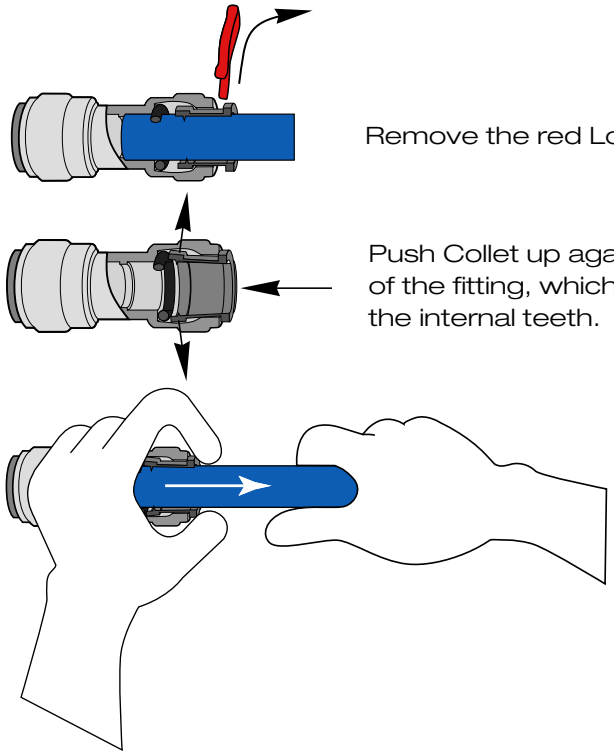

Remove the red Lock-Clip

Push Collet up against body of the fitting, which will release the internal teeth.

While compressing Collet, pull out the tubing.

PWS™ BEV-300 Series Installation Diagram

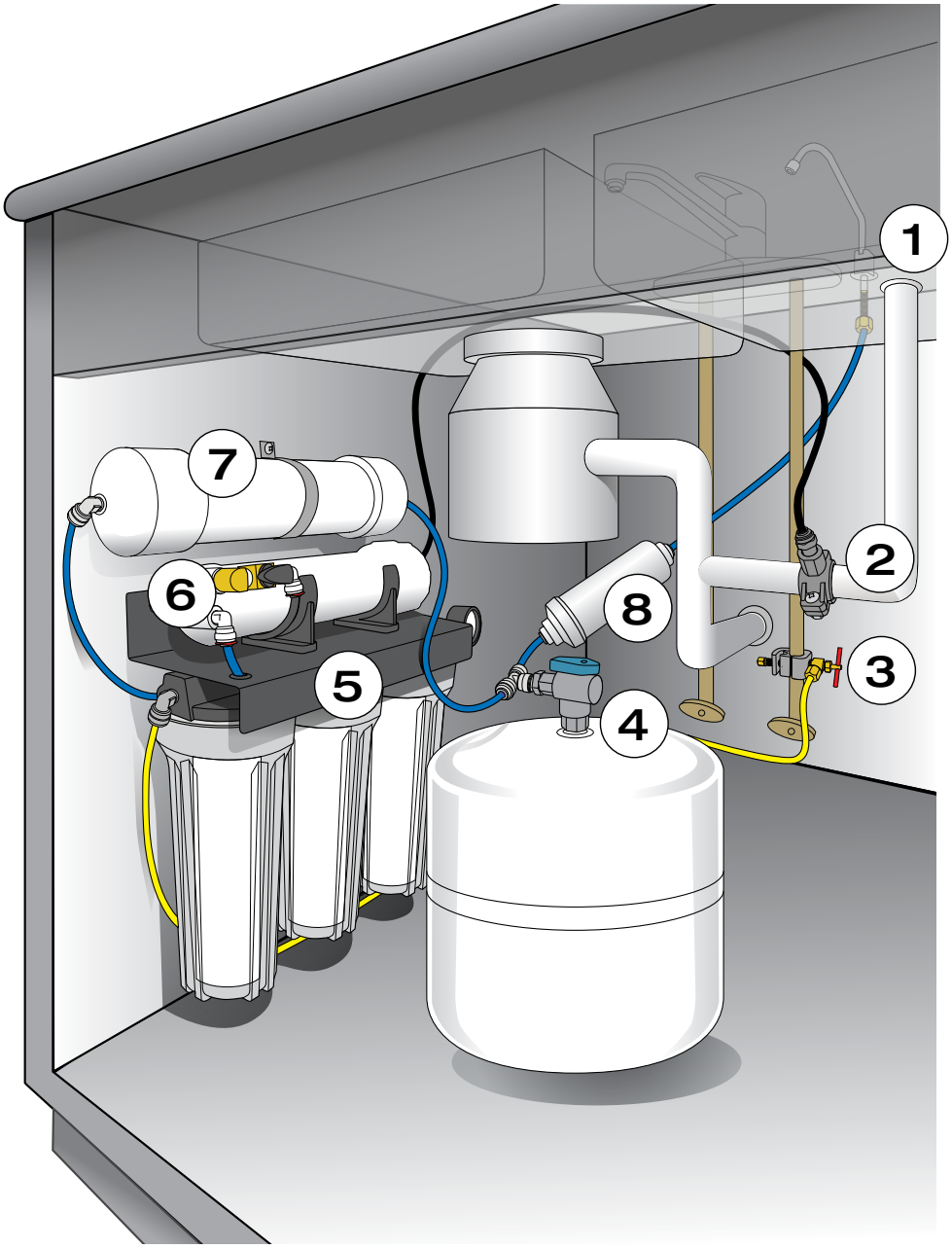

1) Sink Mounted Faucet
2) Drain Saddle Valve
3) Feed Water Valve
4) Tank Ball Valve
5) Main Assembly
6) Flush Valve
7) Deionization Module
8) GAC Post-Filter

SCHEMATIC

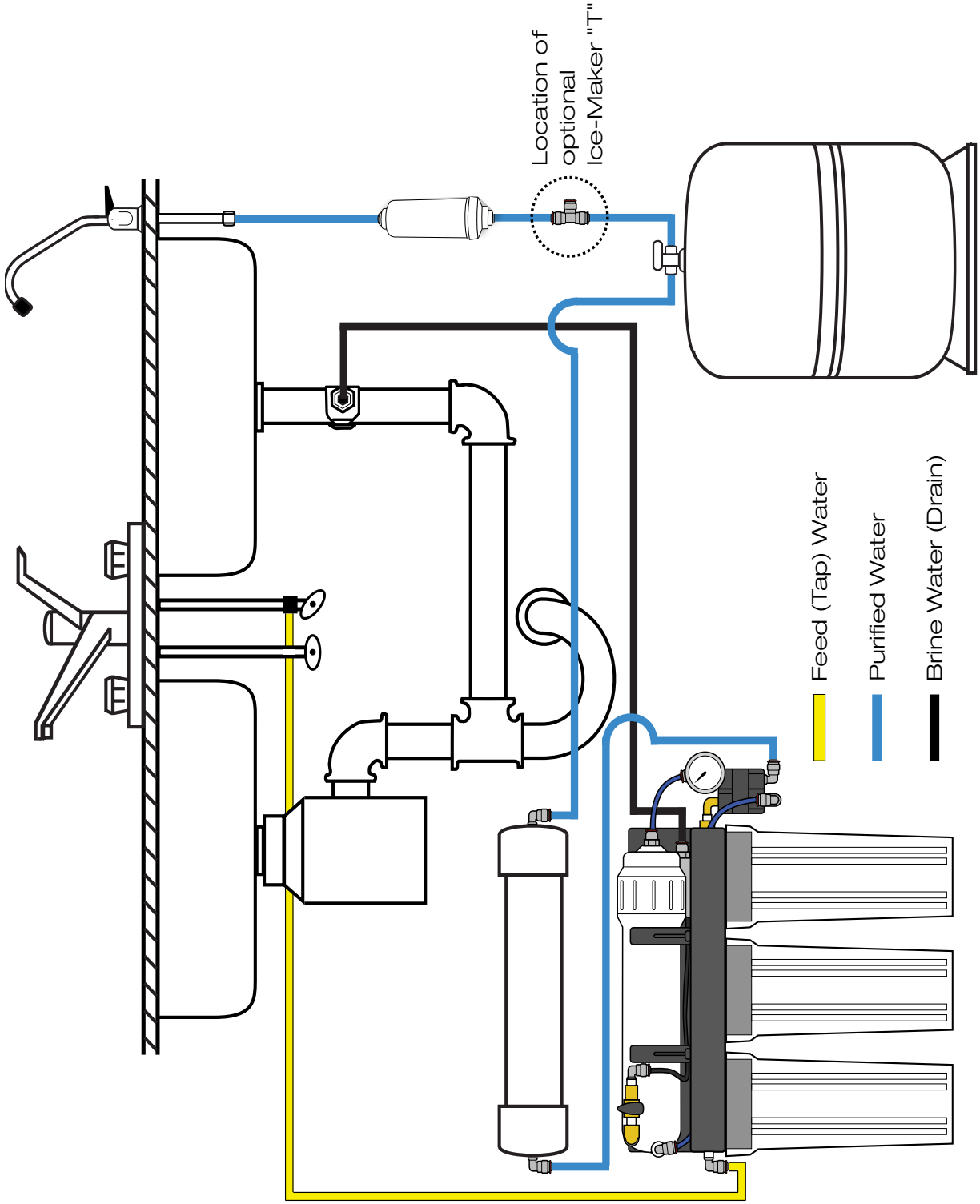

Purpose of diagram is to indicate tubing connections and location of components relative to water flow. Diagram is not drawn to scale and is not intended to indicate actual position of components beneath the sink.